Technical Data Sheet
WF2 Range
XYL-DS-WF2-US-DS-1126

NAM

Wafer™2

Certification/Approvals: UL 508A, NSF 50 – 3 Log Crypto, NSF 61, NVI, USEPA UVDGM

UV Chamber

Features	Standard Specification	Options
Lamp Life	9,000 Hours	
Lamp design	TWISTLOK™ Quick Release	
Lamp and Wiper Access	Single Ended Access	
Pressure rating	150 PSI Design (220 PSI Test)	
UV Sensor	DVGW / UVDGM compliant	
Variable Power	100% to 30% Power (automatic dose pacing)	
Connection Type	ASME B16.5 Class 150	
Chamber Material	316L Stainless Steel	
Internal Surface Finish	125 Ra	
Internal / External Treatment	Electropolished	
Quartz Type	High Purity Quartz Sleeves	
Mounting	Adjustable brackets	
Cleaning system	Automatic Wiper System	
Temperature Probe	RTD PT100	
Vent Port	1/2" NPT Air Release Valve	
Drain Port	1/2" NPT	
Ingress Protection	NEMA 4	
Corrosion protection	-	Sacrificial Anode
Accessories	-	EZ Clean Strainer, Pipeshield
Installation	Horizontal or Vertical	

All information presented here in believed reliable and in accordance with accepted engineering practices. Xylem makes no warranties as to the completeness of this information. Users are responsible for evaluating individual product suitability for specific applications. Xylem assumes no liability whatsoever for any special, indirect, or consequential damages arising from the sale, resale or misuse of its products. Subject to change without notice. © 2025 Xylem Inc. or its affiliates. All rights reserved. Evoqua, Wafer, and TWISTLOK are trademarks of Xylem or one of its subsidiaries.

UV Control Panel

Features	Standard Specification	Options
Material	Epoxy Coated Mild Steel - RAL 7035	Stainless Steel (304)
Control Type	Ecotouch 7	
Power supply	Electronic Ballast	
Ingress Protection	NEMA 12	NEMA 4X
Ventilation	Forced Air cooled (Fan)	
Interface	5” Touchscreen	
Communication	-	Modbus RTU, Profinet, Ethernet IP, Modbus TCP
Protection	Door interlocked switch	
Operating Temperature	Max Working Ambient +113 °F	
Digital Inputs	6-off selectable	
Digital Outputs	5-off selectable	
Analogue Inputs	3-off selectable	
Analogue Outputs	3-off selectable	

Unique Features

UV System	WF-115-3	WF-115-4	WF-125-6	WF-215-6	WF-215-8	WF-225-8	WF-230-10	WF-430-12
Number of Lamps	1	1	1	2	2	2	2	4
Connection Size (inch)	3”	4”	6"	6"	8"	8”	10"	12"
Power Draw (30-100 %)	0.7-1.7 kW	0.7-1.7 kW	1.1-3.0 kW	1.3-3.9 kW	1.3-3.9 kW	2.0-6.1 kW	2.6-8.8 kW	5.3-17.6 kW
208 - 240v 50 / 60hz	Standard	Standard	Standard	Standard	Standard	Standard	N/A	N/A
380v - 480v 50 / 60hz	Option	Option	Option	Option	Option	Option	Standard	Standard
Cable Length								
30 feet	Standard	Standard	Standard	Standard	Standard	Standard	Standard	Standard
100 feet	Option	Option	Option	Option	Option	Option	Option	Option

All information presented here in believed reliable and in accordance with accepted engineering practices. Xylem makes no warranties as to the completeness of this information. Users are responsible for evaluating individual product suitability for specific applications. Xylem assumes no liability whatsoever for any special, indirect, or consequential damages arising from the sale, resale or misuse of its products. Subject to change without notice. © 2025 Xylem Inc. or its affiliates. All rights reserved. Evoqua, Wafer, and TWISTLOK are trademarks of Xylem or one of its subsidiaries.

Technical Data Sheet
WF2 Range
XYL-DS-WF2-US-DS-1126

Dimensions

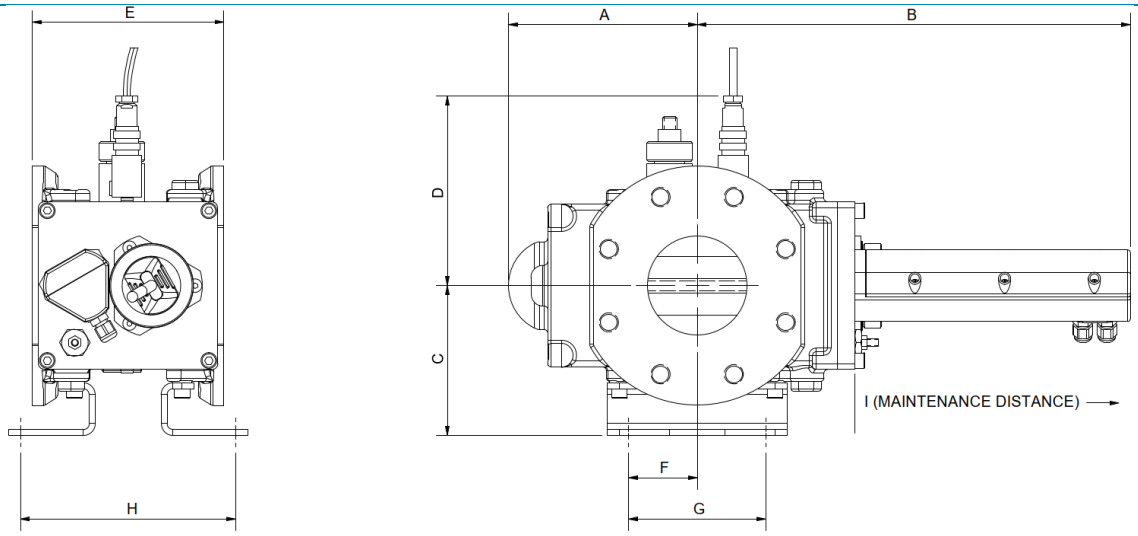

UV System	WF-115-3	WF-115-4	WF-125-6	WF-215-6	WF-215-8	WF-225-8	WF-230-10	WF-430-12
Chamber Dimensions								
A (inches)	6.22		8.50				11.26	
B (inches)	14.25		16.54				19.29	
C (inches)	4.92		7.28				8.66	10.04
D (inches)	6.22		8.54				9.53	10.51
E (inches)	6.30		7.09				7.48	
F (inches)	2.26		4.53				5.51	
G (inches)	4.53		9.06				11.02	
H (inches)	7.09		7.87				8.27	
I (inches)	15.75		20.16				25.04	
Hole (inches)	0.35		0.35				0.35	
Dry Weight (lbs)	46	44	95	99	101	101	148	172
Wet Weight (lbs)	53	53	121	123	126	126	192	220
Control Panel Dimensions								
NEMA 12								
Height (inches)	20		31.5					47.2
Width (inches)	20		23.6					23.6
Depth (inches)	8.3		11.8					11.8
NEMA 4X								
Height (inches)	24		36					48
Width (inches)	24		30					36
Depth (inches)	8		10					16
Weight (lbs)	60		105			115		190

All information presented here in believed reliable and in accordance with accepted engineering practices. Xylem makes no warranties as to the completeness of this information. Users are responsible for evaluating individual product suitability for specific applications. Xylem assumes no liability whatsoever for any special, indirect, or consequential damages arising from the sale, resale or misuse of its products. Subject to change without notice. © 2025 Xylem Inc. or its affiliates. All rights reserved. Evoqua, Wafer, and TWISTLOK are trademarks of Xylem or one of its subsidiaries.